emtest
the benchmark for emc

CNV 504N / 508N SERIES

COUPLING/DECOUPLING NETWORKS FOR UNSHIELDED UNSYMMETRICAL INTERCONNECTION LINES

FOR TESTS ACCORDING TO ...

- › EN 50121
- › EN 61000-4-12
- › EN 61000-4-5
- › IEC 61000-4-12
- › IEC 61000-4-5
- › IEC 61326

CNV 504N/508N - COUPLING/DECOUPLING NETWORKS FOR SIGNAL/DATA LINES

Surge pulses or Ringwave pulses are applied to unshielded unsymmetrical interconnection lines (signal/data lines) by means of standalone coupling/decoupling networks. For such testing EM TEST offers a range of CNVs for either 4 or 8 signal/data lines.
According to IEC/EN 61000-4-5 resp. IEC/EN 61000-4-12 the pulses are coupled via different coupling elements such as capacitors or gas arrestors depending on the characteristics of the line signals.

HIGHLIGHTS

- **› Coupling/decoupling networks according to IEC/EN 61000-4-5 and IEC/EN 61000-4-12**
- **› Coupling via gas arrestor or 0.5 µF capacitor for Surge (3.3 µF capacitor for Ringwave)**
- **› 20 mH decoupling inductor per line**
- **› Differential mode or Common mode coupling selectable**
- **› Test voltage up to 4 kV, 7 kV and 10 kV**

APPLICATION AREAS

- INDUSTRY
- MEDICAL
- RESIDENTIAL

emtest
the benchmark for emc

TECHNICAL DETAILS

SURGE APPLICATION

CNV 504N/508N SERIES - MULTIFUNCTIONAL COUPLING/DECOUPLING NETWORKS

The EM TEST CNV 504N/508N series of coupling decoupling networks are multifunctional CNVs for the application of Surge and Ringwave pulses onto signal/data lines.

The standard CNV 504N/508N models combine three different applications; coupling of Surge pulse via capacitor or gas arrestor and coupling of Ringwave pulses via capacitor being required by the relevant standards. The required coupling mode can easily be selected by means of a simple jumper.

The CNVs also include the required decoupling part consisting of decoupling inductors of 20mH for each line. To protect the auxiliary equipment being needed for testing the DUT an additional protection circuit is integrated at the signal/data line input.

EM TEST offers CNV 504N/CNV 508N coupling/decoupling networks for various test voltages up to 10kV and for higher signal voltages/currents (up to 600V and up to 4A). Dedicated CNVs are available e.g. for railway applications as per EN 50155 and for other customer specific test applications.

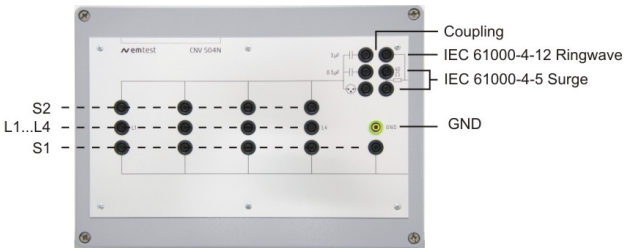

COUPLING

MULTIFUNCTIONAL COUPLING FOR SURGE AND RINGWAVE

The EM TEST CNV 504N/508N series of coupling decoupling networks are multifunctional CDNs for the application of Surge and Ringwave pulses onto signal/data lines.

Surge as per IEC 61000-4-5 Ed.3, Figure 9
- Capacitor 0.5 uF with 40 ohm
- GDT gas arrestor with 40 ohm

Ringwave as per IEC 61000-4-12 Ed.2, Figure 9
- Capacitor ›3.3 uF

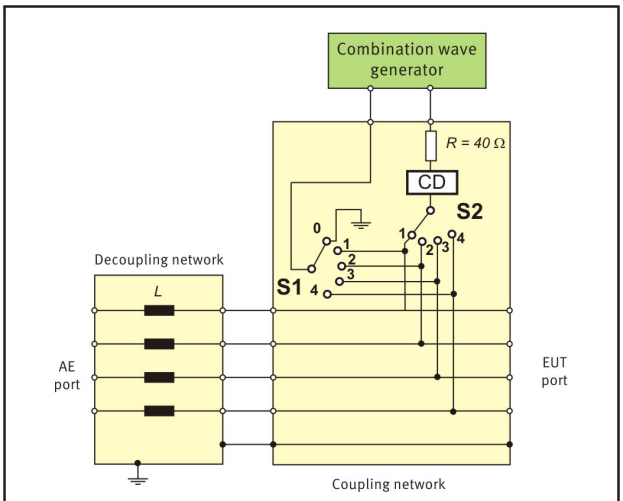

IEC 61000-4-5 Ed.3 (Figure 9)

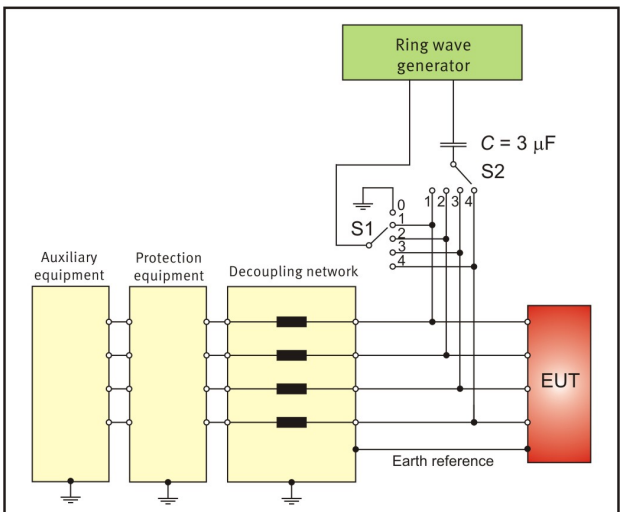

IEC 61000-4-12 Ed.2 (Figure 9)

emtest
the benchmark for emc

TECHNICAL DETAILS

CNV 504N-SERIES FOR 4 UNSHIELDED UNSYMMETRICAL INTERCONNECTION LINES, 50 V

4 KV MODELS, LINE VOLTAGE MAX. 35 VAC, 50 VDC	
CNV 504N1	4 kV coupling/decoupling network max. line current 1 A
CNV 504N1.1	4 kV coupling/decoupling network line current 4 A, intermittent 5A
General data	
Surge coupling	as per Fig. 9 IEC 61000-4-5 Ed.3, - 0.5 µF capacitor via 40 ohm, - GDT gas arrestor via 40 ohm
Ringwave coupling	as per Fig. 9 IEC 61000-4-12 Ed.2, - 3.3 µF capacitor

7 KV MODELS, LINE VOLTAGE MAX. 35 VAC, 50 VDC	
CNV 504N2	7 kV coupling/decoupling network max. line current 1 A
CNV 504N2.1	7 kV coupling/decoupling network line current 4 A, intermittent 5A
General data	
Surge coupling	as per Fig. 9 IEC 61000-4-5 Ed.3, - 0.5 µF capacitor via 40 ohm, - GDT gas arrestor via 40 ohm
Ringwave coupling	as per Fig. 9 IEC 61000-4-12 Ed.2, - 3.3 µF capacitor

10 KV MODELS, LINE VOLTAGE MAX. 35 VAC, 50 VDC	
CNV 504N3	10 kV coupling/decoupling network max. line current 1 A
CNV 504N3.1	10 kV coupling/decoupling network line current 4 A, intermittent 5A
General data	
Surge coupling	as per Fig. 9 IEC 61000-4-5 Ed.3, - 0.5 µF capacitor via 40 ohm, - GDT gas arrestor via 40 ohm

CNV 504N-SERIES FOR 4 UNSHIELDED UNSYMMETRICAL INTERCONNECTION LINES, 300 V

4 KV MODELS, LINE VOLTAGE MAX. 250 VAC, 300 VDC	
CNV 504N1.2	4 kV coupling/decoupling network max. line current 1 A
CNV 504N1.3	4 kV coupling/decoupling network line current 4 A, intermittent 5A
General data	
Surge coupling	as per Fig. 9 IEC 61000-4-5 Ed.3, - 0.5 µF capacitor via 40 ohm
Ringwave coupling	as per Fig. 9 IEC 61000-4-12 Ed.2, - 3.3 µF capacitor

7 KV MODELS, LINE VOLTAGE MAX. 250 VAC, 300 VDC	
CNV 504N2.2	7 kV coupling/decoupling network max. line current 1 A
CNV 504N2.3	7 kV coupling/decoupling network line current 4 A, intermittent 5A
General data	
Surge coupling	as per Fig. 9 IEC 61000-4-5 Ed.3, - 0.5 µF capacitor via 40 ohm
Ringwave coupling	as per Fig. 9 IEC 61000-4-12 Ed.2, - 3.3 µF capacitor

10 KV MODELS, LINE VOLTAGE MAX. 250 VAC, 300 VDC	
CNV 504N3.2	10 kV coupling/decoupling network max. line current 1 A
CNV 504N3.3	10 kV coupling/decoupling network line current 4 A, intermittent 5A
General data	
Surge coupling	as per Fig. 9 IEC 61000-4-5 Ed.3, - 0.5 µF capacitor via 40 ohm

emtest
the benchmark for emc

TECHNICAL DETAILS

CNV 508N-SERIES FOR 8 UNSHIELDED UNSYMMETRICAL INTERCONNECTION LINES, 50 V

4 KV MODELS, LINE VOLTAGE MAX. 35 VAC, 50 VDC	
CNV 508N1	4 kV coupling/decoupling network max. line current 1 A
CNV 508N1.1	4 kV coupling/decoupling network line current 4 A, intermittent 5A
General data	
Surge coupling	as per Fig. 9 IEC 61000-4-5 Ed.3, - 0.5 µF capacitor via 40 ohm, - GDT gas arrestor via 40 ohm
Ringwave coupling	as per Fig. 9 IEC 61000-4-12 Ed.2, - 3.3 µF capacitor

7 KV MODELS, LINE VOLTAGE MAX. 35 VAC, 50 VDC	
CNV 508N2	7 kV coupling/decoupling network max. line current 1 A
CNV 508N2.1	7 kV coupling/decoupling network line current 4 A, intermittent 5A
General data	
Surge coupling	as per Fig. 9 IEC 61000-4-5 Ed.3, - 0.5 µF capacitor via 40 ohm, - GDT gas arrestor via 40 ohm
Ringwave coupling	as per Fig. 9 IEC 61000-4-12 Ed.2, - 3.3 µF capacitor

10 KV MODELS, LINE VOLTAGE MAX. 35 VAC, 50 VDC	
CNV 508N3	10 kV coupling/decoupling network max. line current 1 A
CNV 508N3.1	10 kV coupling/decoupling network line current 4 A, intermittent 5A
General data	
Surge coupling	as per Fig. 9 IEC 61000-4-5 Ed.3, - 0.5 µF capacitor via 40 ohm, - GDT gas arrestor via 40 ohm

CNV 508N-SERIES FOR 8 UNSHIELDED UNSYMMETRICAL INTERCONNECTION LINES, 300 V

4 KV MODELS, LINE VOLTAGE MAX. 250 VAC, 300 VDC	
CNV 508N1.2	4 kV coupling/decoupling network max. line current 1 A
CNV 508N1.3	4 kV coupling/decoupling network line current 4 A, intermittent 5A
General data	
Surge coupling	as per Fig. 9 IEC 61000-4-5 Ed.3, - 0.5 µF capacitor via 40 ohm
Ringwave coupling	as per Fig. 9 IEC 61000-4-12 Ed.2, - 3.3 µF capacitor

7 KV MODELS, LINE VOLTAGE MAX. 250 VAC, 300 VDC	
CNV 508N2.2	7 kV coupling/decoupling network max. line current 1 A
CNV 508N2.3	7 kV coupling/decoupling network line current 4 A, intermittent 5A
General data	
Surge coupling	as per Fig. 9 IEC 61000-4-5 Ed.3, - 0.5 µF capacitor via 40 ohm
Ringwave coupling	as per Fig. 9 IEC 61000-4-12 Ed.2, - 3.3 µF capacitor

10 KV MODELS, LINE VOLTAGE MAX. 250 VAC, 300 VDC	
CNV 508N3.2	10 kV coupling/decoupling network max. line current 1 A
CNV 508N3.3	10 kV coupling/decoupling network line current 4 A, intermittent 5A
General data	
Surge coupling	as per Fig. 9 IEC 61000-4-5 Ed.3, - 0.5 µF capacitor via 40 ohm

emtest
the benchmark for emc

TECHNICAL DETAILS

GENERAL

4 KV DEVICES, DIMENSION AND WEIGHTS	
Model	dimension (L x W x H), weight
CNV 504 N1	330 x 230 x 112 mm, 5.40 kg
CNV 504 N1.1	330 x 230 x 112 mm, 9.55 kg
CNV 504 N1.2	330 x 230 x 112 mm, 5.50 kg
CNV 504 N1.3	330 x 230 x 112 mm, 9.75 kg
CNV 508 N1	330 x 230 x 112 mm, 6.40 kg
CNV 508 N1.1	448 x 395 x 142 mm, 17.45 kg
CNV 508 N1.2	330 x 230 x 112 mm, 6.65 kg
CNV 508 N1.3	448 x 395 x 142 mm, 17.65 kg

7 KV DEVICES, DIMENSION AND WEIGHTS	
Model	dimension (L x W x H), weight
CNV 504 N2	448 x 305 x 142 mm, 9.10 kg
CNV 504 N2.1	448 x 305 x 142 mm, 11.80 kg
CNV 504 N2.2	448 x 305 x 142 mm, 6.70 kg
CNV 504 N2.3	448 x 305 x 142 mm, 11.85 kg
CNV 508 N2	448 x 305 x 142 mm, 12.90 kg
CNV 508 N2.1	448 x 395 x 142 mm, 17.60 kg
CNV 508 N2.2	448 x 305 x 142 mm, 12.90 kg
CNV 508 N2.3	448 x 395 x 142 mm, 17.65 kg

10 KV DEVICES, DIMENSION AND WEIGHTS	
Model	dimension (L x W x H), weight
CNV 504 N3	448 x 305 x 142 mm, 9.25 kg
CNV 504 N3.1	448 x 305 x 142 mm, 10.50 kg
CNV 504 N3.2	448 x 305 x 142 mm, 9.40 kg
CNV 504 N3.3	448 x 305 x 142 mm, 10.65 kg
CNV 508 N3	448 x 305 x 142 mm, 13.50 kg
CNV 508 N3.1	448 x 395 x 142 mm, 17.45 kg
CNV 508 N3.2	448 x 305 x 142 mm, 13.55 kg
CNV 508 N3.3	448 x 395 x 142 mm, 17.55 kg

GENERAL

DECOUPLING	
Decoupling inductance	20 mH, each line

ENVIRONMENT	
Temperature	10 °C to 40 °C
Humidity	10 % to 80 %, non condensing
Atmospheric pressure	86 kPa (860 mbar) to 106 kPa (1,060 mbar)

emtest
the benchmark for emc

COMPETENCE WHEREVER YOU ARE

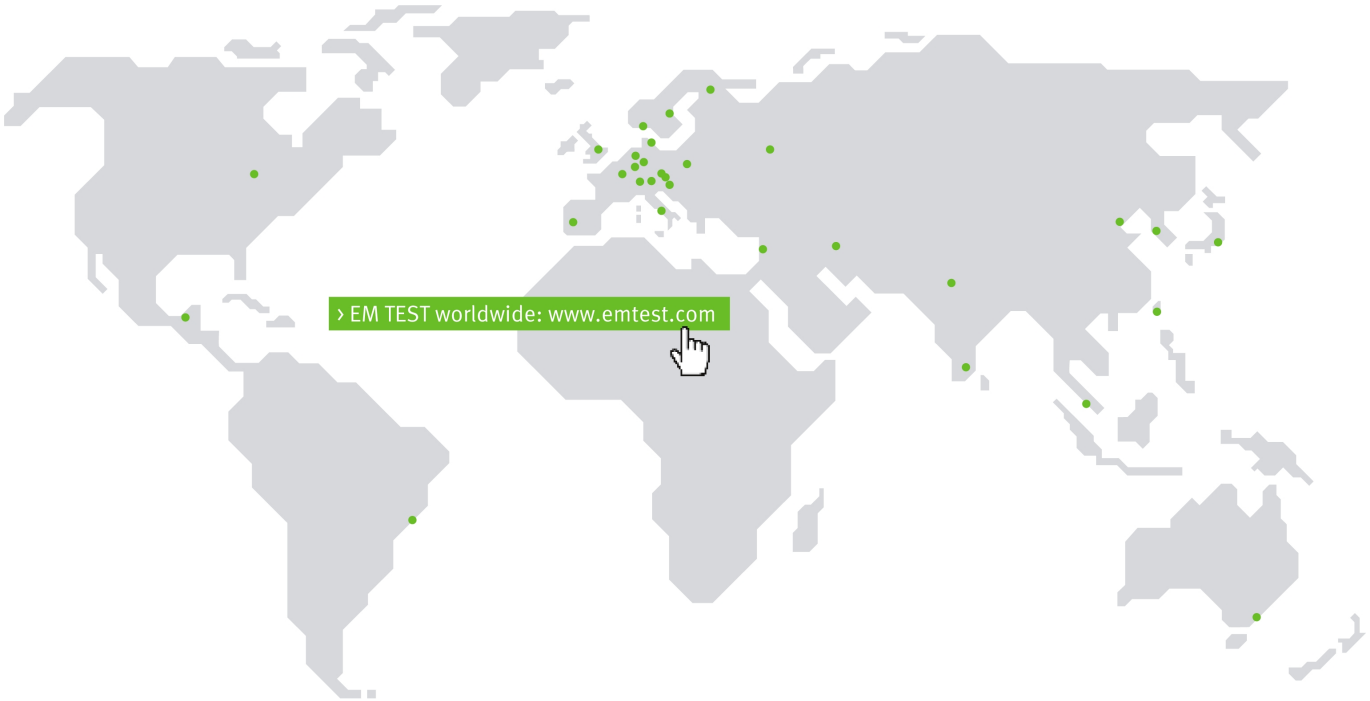

CONTACT EM TEST DIRECTLY

Switzerland
AMETEK CTS GmbH › Sternenhofstraße 15 › 4153 Reinach › Switzerland
Phone +41 (0)61 204 41 11 › Fax +41 (0)61 204 41 00
Internet: www.ametek-cts.com › E-mail: sales.conducted.cts@ametek.com

Germany
AMETEK CTS Europe GmbH › Customer Care Center EMEA › Lünener Straße 211 › 59174 Kamen › Germany
Phone +49 (0) 2307 26070-0 › Fax +49 (0) 2307 17050
Internet: www.ametek-cts.com › E-mail: info.cts.de@ametek.com

Poland
AMETEK CTS Europe GmbH › Biuro w Polsce › ul. Twarda 44 › 00-831 Warsaw › Poland
Phone +48 (0) 518 643 12
Internet: www.ametek-cts.com › E-mail: Infopolska.cts@ametek.com

USA / Canada
AMETEK CTS US › 52 Mayfield Ave › Edison › NJ 08837 › USA
Phone +1 732 417 0501
Internet: www.ametek-cts.com › E-mail: usasales.cts@ametek.com

P.R. China
AMETEK Commercial Enterprise (Shanhai) Co. Ltd.› Beijing Branch› Western Section, 2nd floor› Jing Dong Fang Building (B10)› Chaoyang District›Beijing, China, 100015
Phone +86 10 8526 2111 › Fax +86 (0)10 82 67 62 38
Internet: www.ametek-cts.com › E-mail: chinasales@ametek.com

Republic of Korea
EM TEST Korea Limited › #405 › WooYeon Plaza › #986-8 › YoungDeok-dong › Giheung-gu › Yongin-si › Gyeonggi-do › Korea
Phone +82 (31) 216 8616 › Fax +82 (31) 216 8616
Internet: www.emtest.co.kr › E-mail: sales@emtest.co.kr

Singapore
AMETEK Singapore Pte. Ltd › No. 43 Changi South Avenue 2 › 04-01 Singapore 48164
Internet: www.ametek-cts.com › E-mail: singaporesales.cts@ametek.com

Great Britain
AMETEK GB › 5 Ashville Way › Molly Millars Lane › Wokingham › Berkshire RG41 2 PL › Great Britain
Phone +44 845 074 0660
Internet: www.ametek-cts.com

Information about scope of delivery, visual design and technical data correspond with the state of development at time of release. Subject to change without further notice.